IP INTELLIGENT DOME PTZ CAMERA

IP Intelligent Dome Camera. H.264. Varifocal Lens. 36-27x Optical zoom.

- **High performance CCD**
- **530-560 TVL Horizontal Resolution**
- **Varifocal Lens.**
- **27x - 36x Optical zoom**
- **IR Cut Filter**
- **WDR (depending on the model)**
- **H.264 video compression**
- **Weather Proof: IP66 standard**
- **Built-in Video Analysis**
- **Additional Video Analysis License Optional**

Dimensions (unit mm)

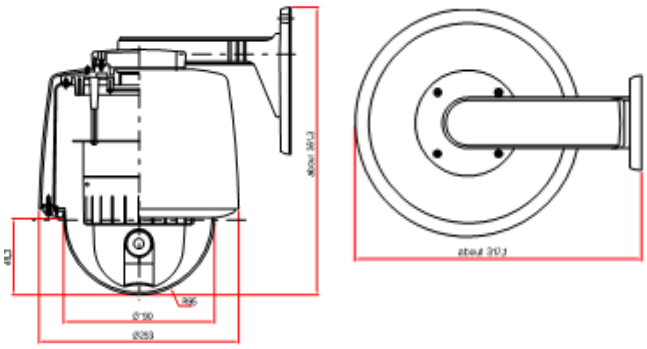

Accessory Options

SES-4550

Long-arm wall mount

SES-X4100

Junction box

Specifications

		SED-94100-2212-36O	SED-94100-1212-27O
		1/4'' CCD sensor. 3.4 - 122.4 mmVarifocal lens. 530 TVL 36x Optical Zoom	1/4'' CCD sensor. 3.5 - 95 mm Varifocal lens. 560 / 680 TVL 27x Optical Zoom
Camera	Image Sensor	1/4" Sony Exview HAD CCD	1/4" Interline Transfer CCD
	Effective Pixel	PAL: 752(H) x 582(V) NTSC: 768(H) x 494(V)	PAL: 752(H) x 582(V) NTSC: 768(H) x 494(V)
	Horizontal Resolution	530 TVL	560 TVL (Color) / 680TVL (B/W)
	Signal System	PAL / NTSC	PAL / NTSC
	Min. Illumination	Color: 0.1 Lux B/W: 0.01 Lux	Color: 0.2 Lux B/W: 0.02 Lux
	Day & Night	IR Cut Filter	IR Cut Filter
	Digital Zoom	12x	16x
	Focal Length	3.4 - 122.4 mm, 36x	3.5 - 95 mm, 27x
	Aperture	F= 1.6 - 4.5	F= 1.6 - 2.8
	WDR	Support	-
	Digital Slow Shutter	ON / OFF	ON / OFF
	S/N Ratio	More than 50 dB	More than 50 dB
	BLC	ON/OFF	ON/OFF
	Flicker less (NTSC)	ON/OFF	ON/OFF
Pan and Tilt	Pan Range	360° endless	360° endless
	Pan Speed	Pan Manual Speed: 0.05º - 100 o 200°/s, Max Pan Preset Speed: 300°/s	Pan Manual Speed: 0.5º - 100 o 200°/s, Max Pan Preset Speed: 300°/s
	Tilt Range	-2° - 90°	-2° - 90°
	Tilt Speed	Tilt Manual Speed: 0.5º - 45°/s, Max Tilt Preset Speed: 250°/s	Tilt Manual Speed: 0.5º - 45°/s, Max Tilt Preset Speed: 250°/s
	Auto Flip	ON / OFF	ON / OFF
	Number of Preset	165	165
	Patrol	8 patrols, up to 60 presets per patrol	8 patrols, up to 60 presets per patrol
Alarm	Alarm Input	4	4
	Alarm Output	2	2
Input/ Output	Monitor Output	1.0 V [p-p] / 75 Ω, NTSC (or PAL) composite, BNC	1.0 V [p-p] / 75 Ω, NTSC (or PAL) composite, BNC
	Audio Input	1 channel	1 channel
	Audio Output	1 channel	1 channel
Network	Ethernet	10Base-T / 100Base-TX, RJ45 connector	10Base-T / 100Base-TX, RJ45 connector
	Resolutions	D1, 2CIF, CIF, QCIF	D1, 4CIF, 2CIF, VGA, CIF, QVGA, QCIF
	Frame Rate	PAL: 25 fps @ D1 NTSC: 30 fps @ D1	PAL: 25 fps @ D1 NTSC: 30 fps @ D1
	Image Compression	H.264, MPEG4, MJPEG	H.264, MPEG-4, MJPEG
	Audio Compression	G.711	G.711
	Protocols	TCP/IP, UDP/IP, HTTP, RTSP, RTCP, RTP/UDP, RTP/TCP, SNTP, mDNS, UPnP, SMTP, SOCK, IGMP, DHCP, DDNS, SSL v2/v3, IEEE 802.1X, SSH	TCP/IP, UDP/IP, HTTP, RTSP, RTCP, RTP/UDP, RTP/TCP, SNTP, mDNS, UPnP, SMTP, SOCK, IGMP, DHCP, DDNS, SSL v2/v3, IEEE 802.1X, SSH, SNMP v2/v3
	SD Memory Card	Support (microSD type)	Support, micro SD up to 8 GB
	Dual Stream	Support	Support
General	Power Supply	18~32 VAC 60/50Hz 1.5A	18~32 VAC 60/50Hz 1.5A
	Power Consumption	36W Max (outdoor)	36W Max (outdoor)
	Working Temperature / Humidity	-40 °C - 50 °C (-22 °F - 122 °F) Up to 85% RH (Non-condensing)	-40 °C - 50 °C (-22 °F - 122 °F) Up to 85% RH (Non-condensing)
	Certification	FCC / CE, IP66	FCC / CE, IP66
	Dimension	190(Φ) x 307(H) mm	149(Φ) x 312(H) mm
	Weight (approx.)	5.7 kg	5.7 kg